Warringtonfire
Holmesfield Road
Warrington
Cheshire
WA1 2DS
United Kingdom
T: +44 (0)1925 655116
W: www.warringtonfire.com

Title:

The Fire Resistance Performance of a Loadbearing Timber Floor Assembly Protected by a Plasterboard Ceiling Designed to Provide 60 Minutes Fire Resistance, Incorporating Nine Downlight Fittings, When Tested Accordance with BS EN 1365 - 2: 2014

Date of Test:

20th January 2020

Issue 1:

26th June 2020

WF Report No.

416977

Prepared for:

Ansell Electrical Product

Unit 6B, Stonecross Ind. Park,
Yew Tree,
Warrington
WA3 3JD.

UKAS TESTING
0249

Summary

Objective

To determine the fire resistance performance of a loadbearing timber floor assembly protected by a plasterboard ceiling designed to provide 60 minutes fire resistance, incorporating nine down lighter lightfittings, when tested in accordance with BS EN 1365 - 2: 2014.

Sponsor

Ansell Electrical Products,

Unit 6B, Stonecross Ind. Park,
Yew Tree,
Warrington
WA3 3JD**.**

Summary of the Tested Specimen

The timber floor had overall nominal dimensions of 4500 mm long by 3000 mm wide by 234 mm deep. It comprised softwood engineered timber joists at 600 mm centres, spanning the 4m length of the furnace. The upper surface of the floor comprised nominally 22 mm thick tongue and grooved chipboard flooring. The floor assembly was protected on its underside by a direct fixed ceiling, formed from two layers of 15 mm thick plasterboard referenced 'Gyproc Type F Wallboard'.

The floor supported a uniformly distributed load of 1.5 kN/m^2. This load was provided by the test sponsor as to represent the expected maximum working load for the timber floor construction in practice.

The ceiling incorporated nine down lighter light fittings referenced as follows:

Test specimen Reference	Manufacturer	Model Reference	Cut out size (mm)
B(1)	Ansell Electrical Products Ltd.	APRILEDP/WW	73
B(2)	Ansell Electrical Products Ltd.	APRILEDP/WW	73
C(1)	Ansell Electrical Products Ltd.	APRILEDP/CCT	73
C(2)	Ansell Electrical Products Ltd.	APRILEDP/CCT	73
D	Ansell Electrical Products Ltd.	AEFRG/MW	76
E	Ansell Electrical Products Ltd.	AEFRD/MW	76
F	Ansell Electrical Products Ltd.	AEFRD/IP65/MW	76
G(1)	Ansell Electrical Products Ltd.	APRILEDP/G/BLK	73
G(2)	Ansell Electrical Products Ltd.	APRILEDP/G/BLK	73

Performance Criteria and Test Results

Loadbearing Capacity

This is the time in completed minutes for which the test specimen continues to maintain its ability to support the test load during the test. Support of the test load is determined by both the amount and the rate of deflection. The limiting deflection and the limiting rate of deflection for the specimen, as specified by the Standard, are calculated as:

(d) Depth of structural section, mm	220
(L) Length of clear span, mm	4410
Limiting deflection, mm	221
Limiting rate of deflection, mm/sec	9.82

The allowable rate of deflection criteria is not applicable for the first 10 minutes of the test. This criterion was satisfied for 60 minutes*.

Integrity

It is required that the specimen retains its separating function, without:

- causing ignition of a cotton pad when applied
- permitting the penetration of a gap gauge as specified in BS EN 1363-1: 2012
- sustained flaming on the unexposed surface
- subsequent failure of loadbearing capacity

These requirements were satisfied for the periods shown below:

Sustained flaming 60 minutes*

Gap gauge 60 minutes No failure*

Cotton pad 60 minutes*

Insulation

It is required that the mean temperature rise of the unexposed surface shall not be greater than 140°C and that the maximum temperature rise shall not be greater than 180°C. Insulation failure also occurs simultaneously with integrity failure. **These requirements were satisfied for the period shown below:**

60 minutes* Due to integrity failure

*Test was discontinued after a period of 60 minutes.

Date of Test 20th January 2020

Signatories

Responsible Officer **G. Edmonds*** Senior Testing Officer

Approved **W. Drazkiewicz*** Technical Manager

* For and on behalf of **Warringtonfire**.

Report Issued Date: 26th June 2020

Revision History

Issue No:	Re-issue Date:
Revised By:	Approved By:
Reason for Revision:	

Issue No:	Re-issue Date:
Revised By:	Approved By:
Reason for Revision:	

CONTENTS **PAGE NO.**

Test Procedure

Introduction

The specimen tested was of a loadbearing timber floor construction protected by a direct fix ceiling assembly. The test was conducted in accordance with BS EN 1365-2: 2014, 'Fire resistance tests for loadbearing elements – Part 2: Floors and Roofs'. This test report should be read in conjunction with that Standard and with BS EN 1363-1: 2012, 'Fire resistance tests part 1, general requirements' and BS EN 1363-2: 1999, 'Fire resistance tests part 2, alternative and additional procedures'.

The purpose of the test was to evaluate the performance of a timber floor construction protected by a ceiling of known fire resistance, when incorporating nine down lighter light fitting assemblies.

Fire Test Study Group/EGOLF

Certain aspects of some fire test specifications are open to different interpretations. The Fire Test Study Group and EGOLF have identified a number of such areas and have agreed Resolutions which define common agreement of interpretations between fire test laboratories which are members of the Groups. Where such Resolutions are applicable to this test they have been followed.

Instruction to test

The test was conducted on the 20th January 2020 at the request of **Ansell Lighting Products Limited**, the sponsor of the test.

Test Specimen Construction

A comprehensive description of the test construction is given in the Schedule of Components. The description is based on a detailed survey of the specimen down lighters and information supplied by the sponsor of the test.

Installation

Representatives of **Warringtonfire** assembled the floor construction and installed the down lighters between the 10th and 17th January 2020.

Sampling

Warringtonfire was not involved in any selection or sampling procedures of the down lighters.

Conditioning

The specimen's storage, construction, and test preparation took place in the test laboratory over a total combined time of 11 days. Throughout this period of time both the temperature and the humidity of the laboratory were measured and recorded as being within a range of from 7°C to 22.5°C and 36% to 62.5% respectively.

Test Specimen

Figure 1- Plan View of Test Specimen

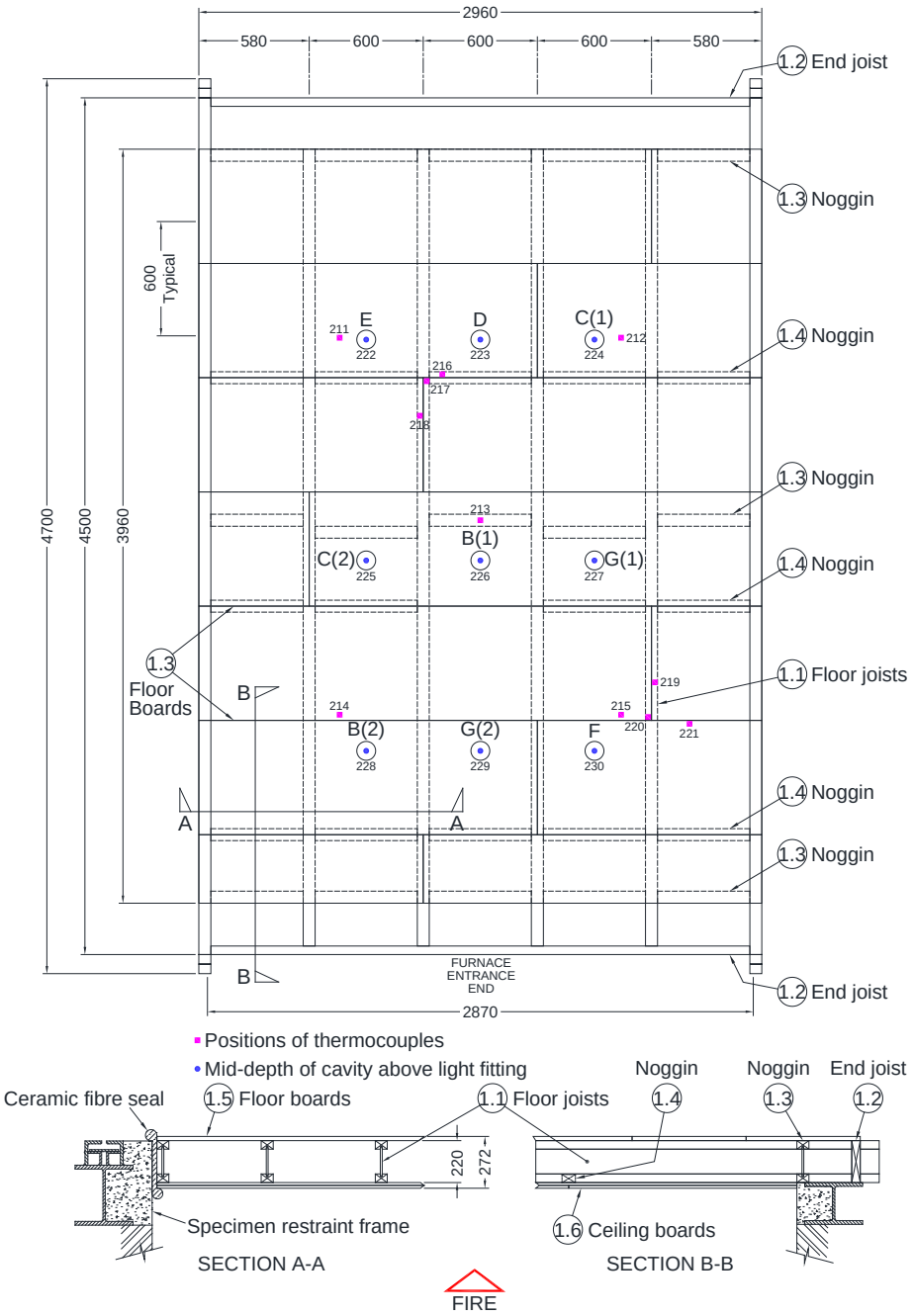

Do not scale. All dimensions are in mm

Figure 2 – Details of Downlighter Positions

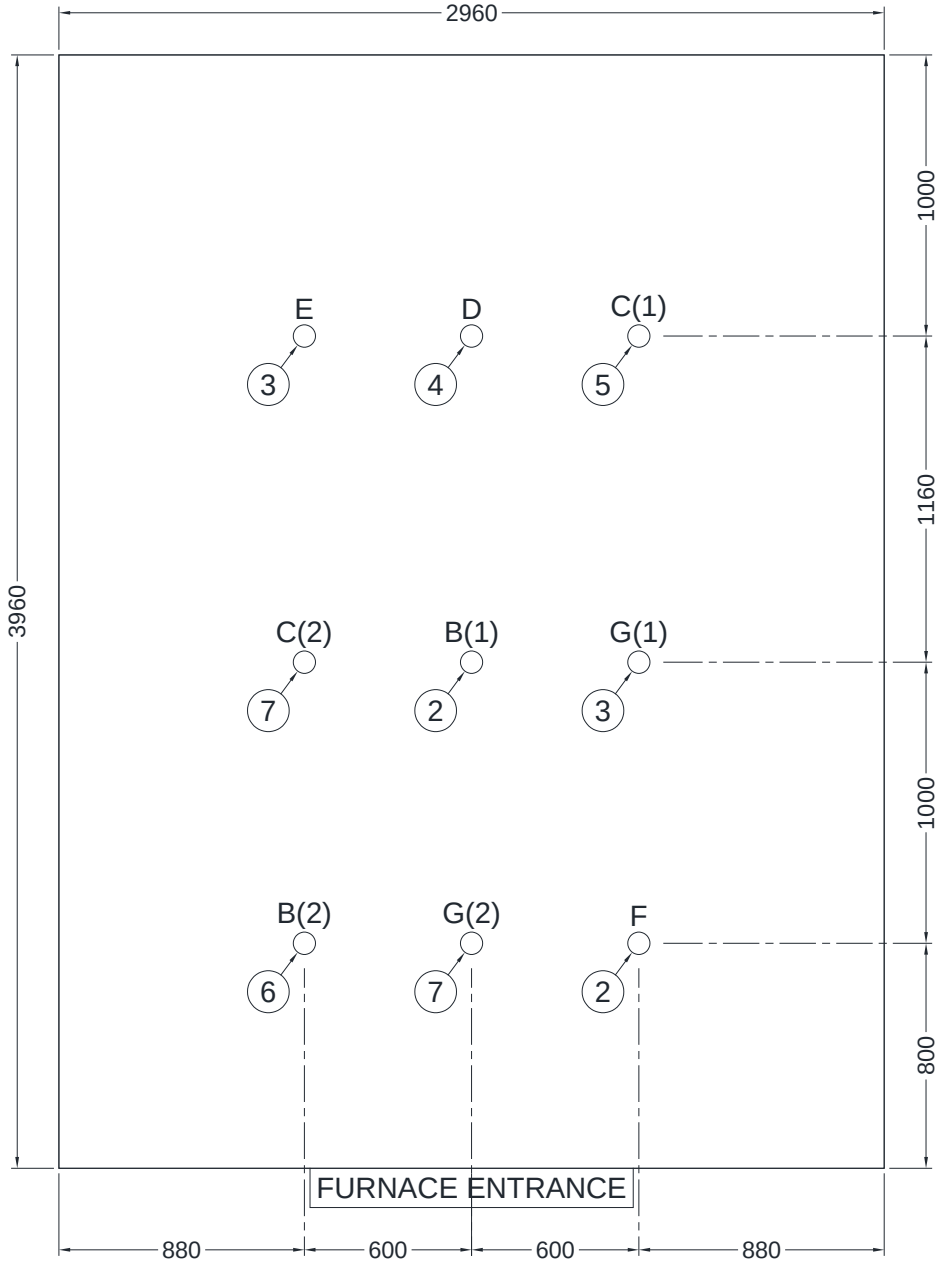

Do not scale. All dimensions are in mm

Figure 3 – Details of Downlighters Specimen B (1 & 2)

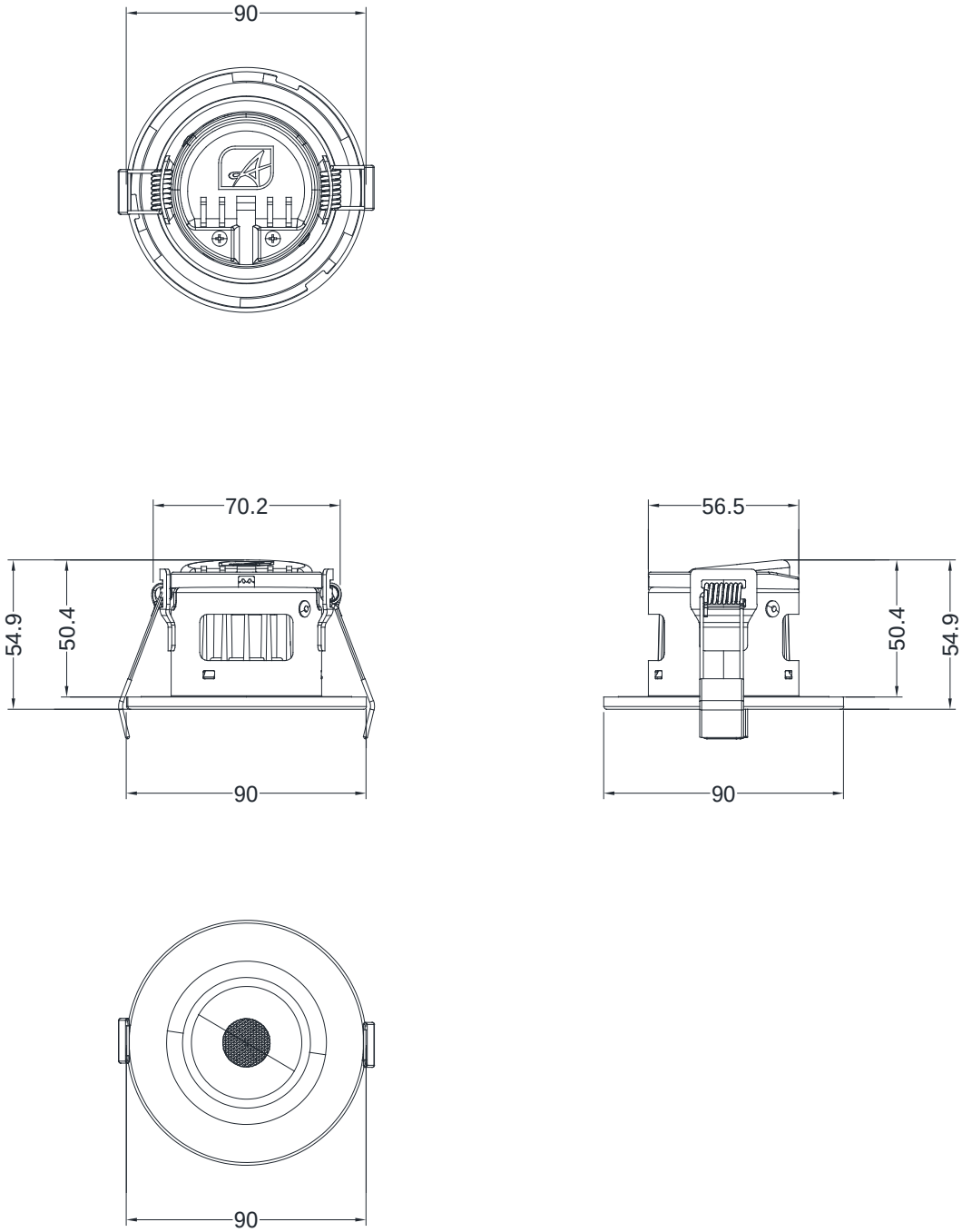

Do not scale. All dimensions are in mm

Figure 4 – Details of Downlighters Specimen C (1 & 2)

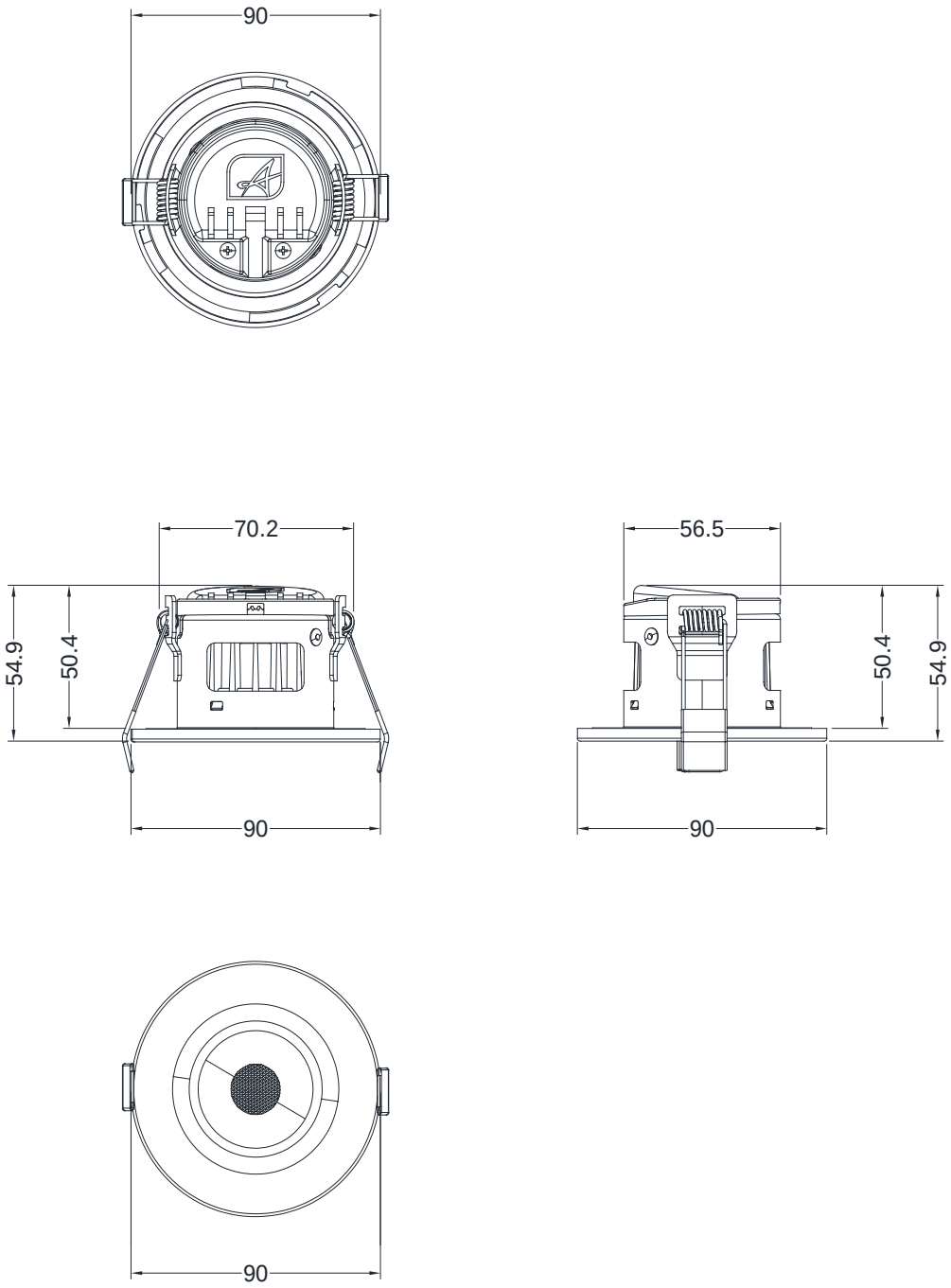

Do not scale. All dimensions are in mm

Figure 5 – Details of Downlighters Specimen D

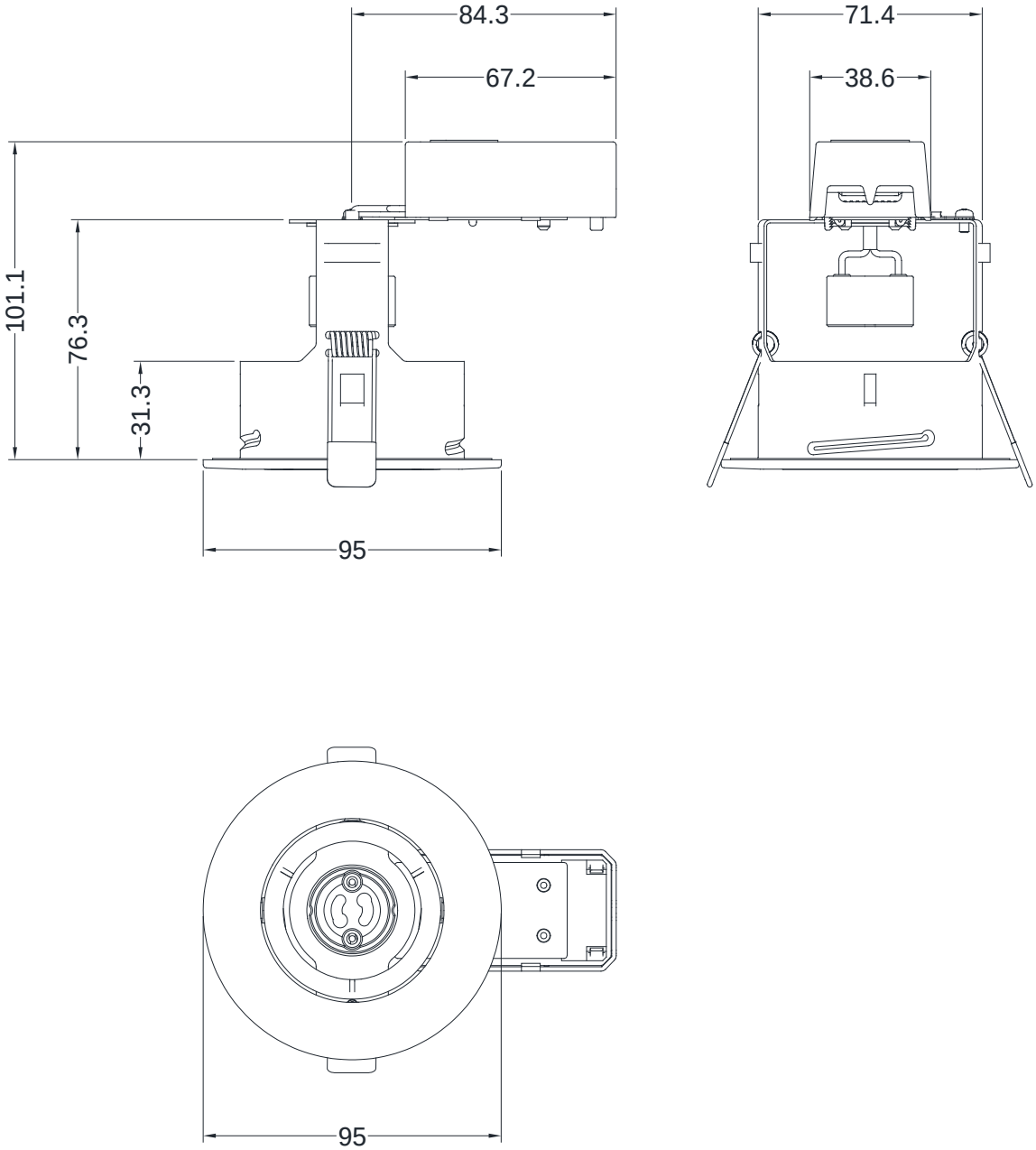

Do not scale. All dimensions are in mm

Figure 6 – Details of Downlighters Specimen E

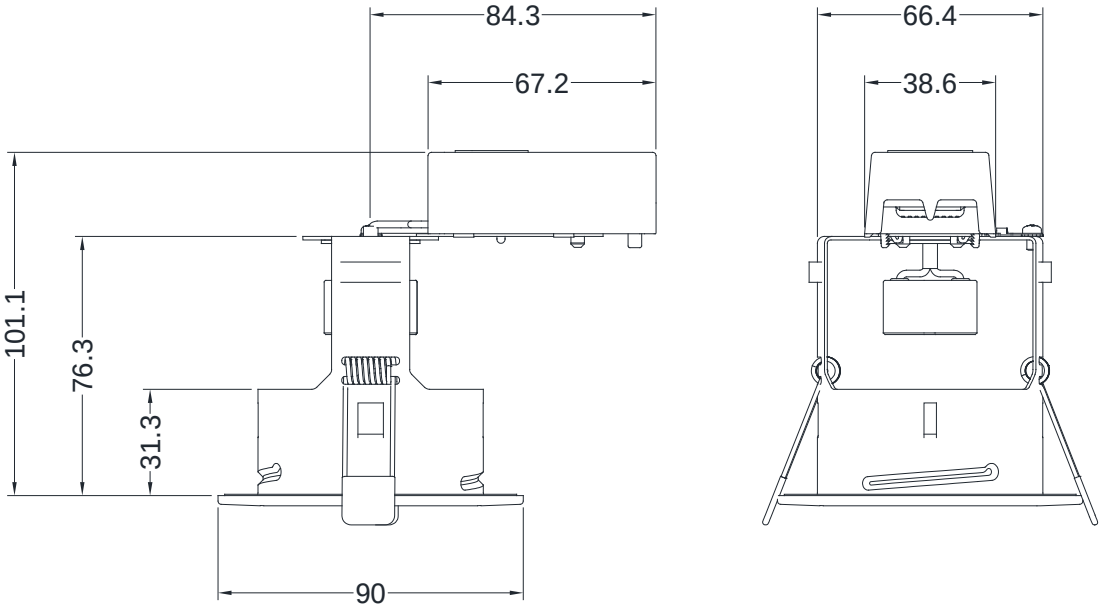

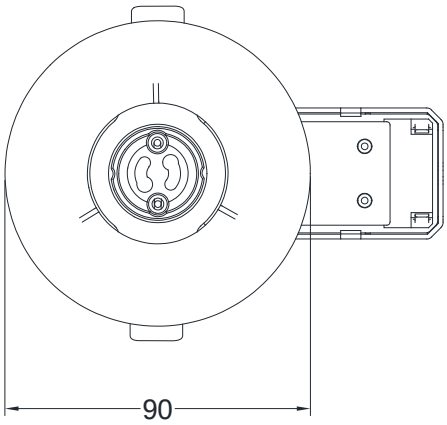

Do not scale. All dimensions are in mm

Figure 7 – Details of Downlighters Specimen F

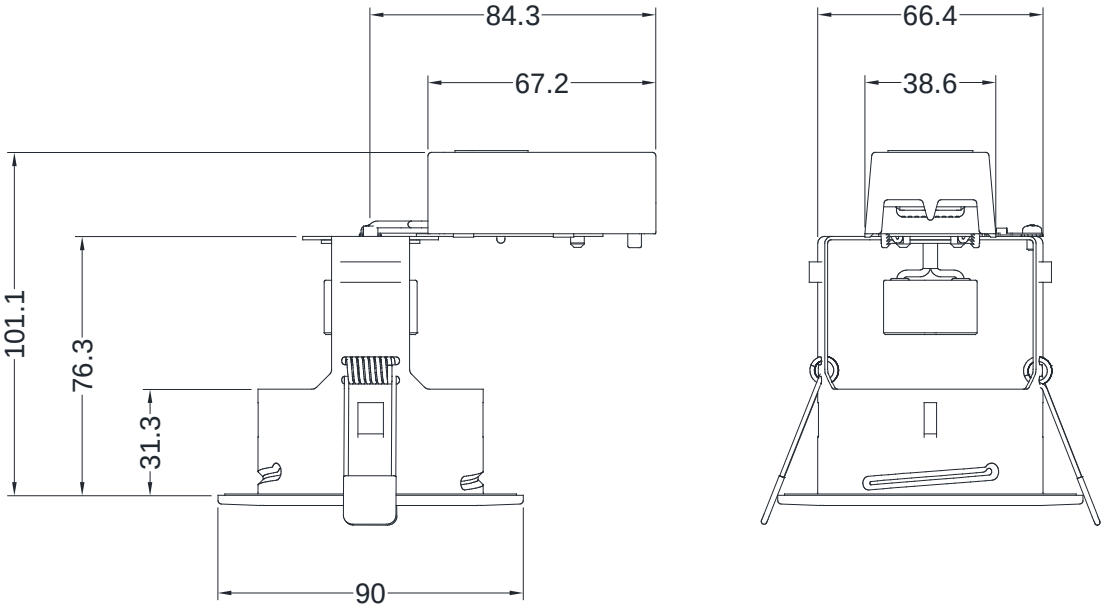

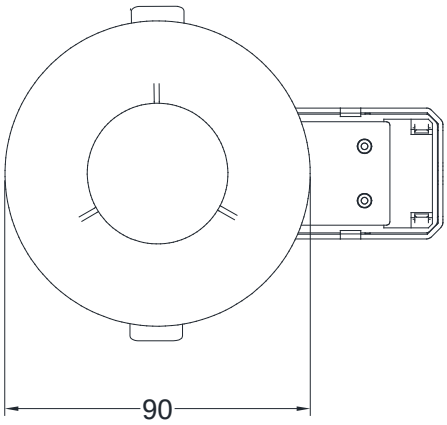

Do not scale. All dimensions are in mm

Figure 8 – Details of Downlighters Specimen G (1 & 2)

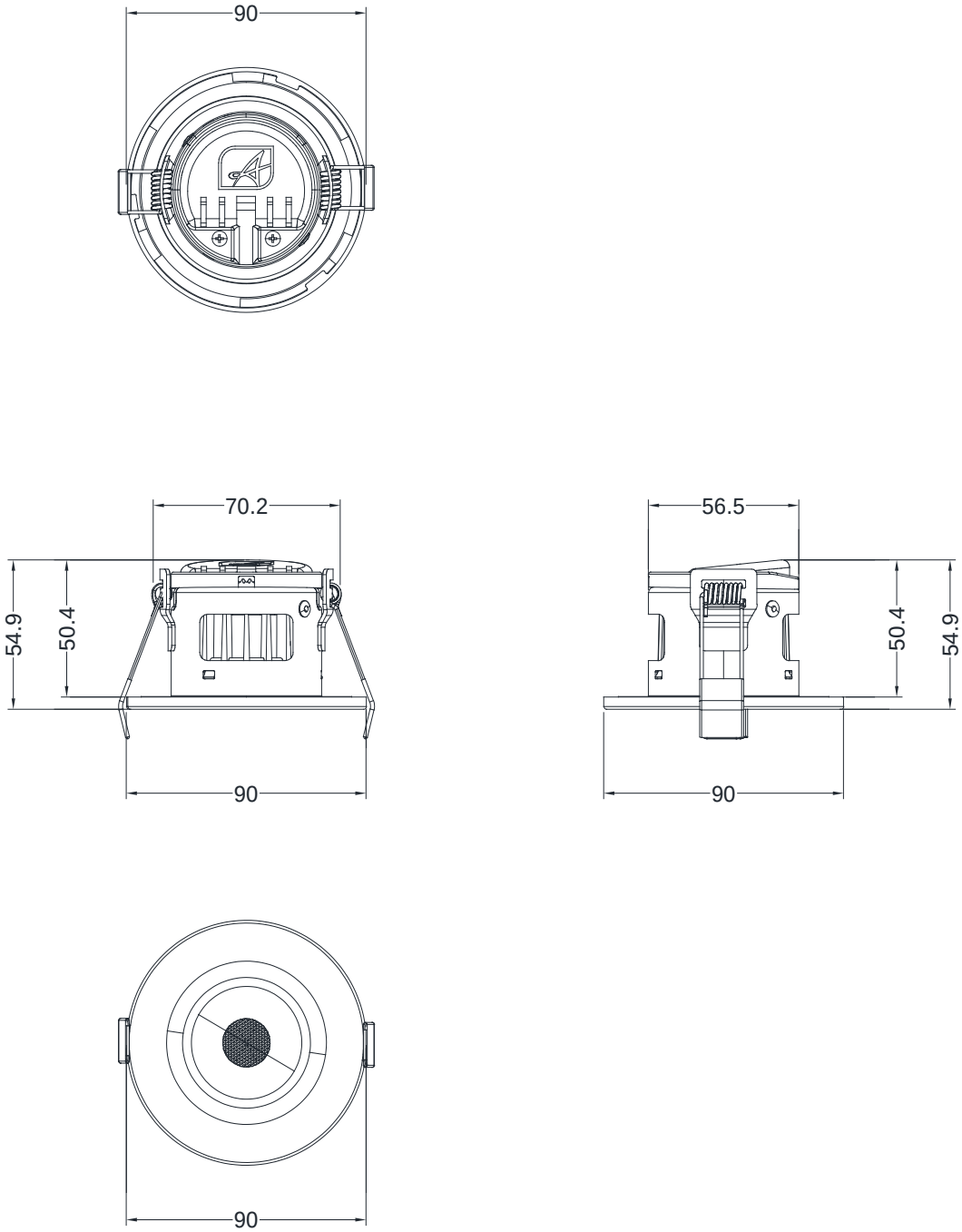

Do not scale. All dimensions are in mm

Figure 9 – Details of Driver for Downlighters

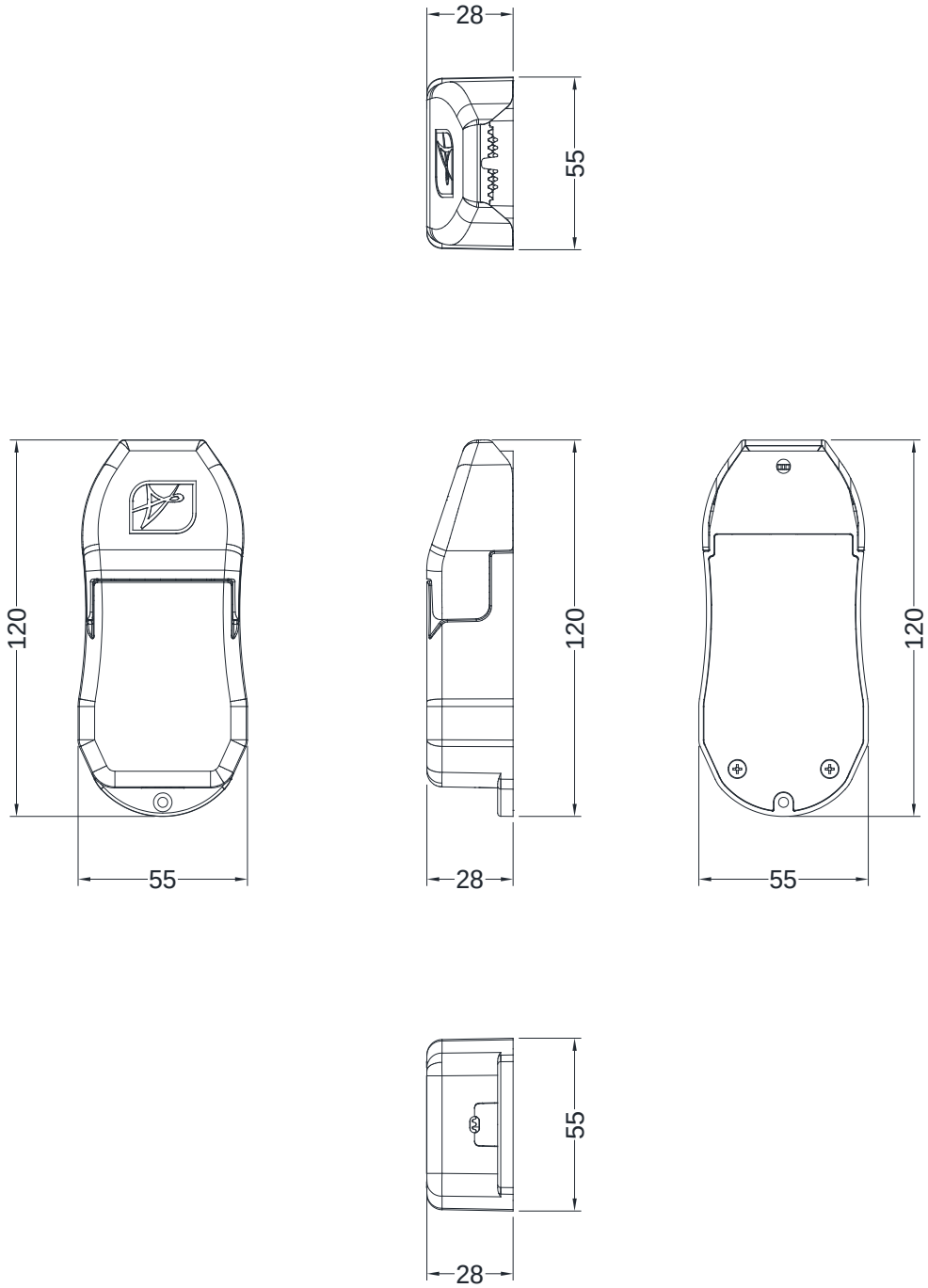

Do not scale. All dimensions are in mm

Schedule of Components

(Refer to Figures 1 to 10)
(All other details are as stated by the sponsor)

Item		Description
1. Timber Floor		
1.1. Engineered-Joints		
Assembled joist size	:	62 mm wide x 220 mm deep x 4400 mm long
Top and bottom chords		
i. material	:	General commercial softwood
ii. density	:	382.9 kg/m^3, measured
iii. cross section	:	47 mm high x 62 mm wide x 4400mm long
Web		
i. material	:	Oriented strand board, OSB
ii. density	:	603.5 kg/m^3, measured
iii. cross section	:	126.6 mm high x 9.6 mm thick x 4400 mm
Centres	:	600 mm, please see Figure 1
1.2. End Joists		
Material	:	British home-grown, rough sawn softwood, kiln dried
Grade	:	C24, to BS EN 519
Density	:	316 kg/m^3, measured
Size	:	45 mm wide x 220 mm deep x 2887 long
Fixing method	:	Fitted across the ends of the posi-joists and through screwed to the top and bottom chords of each joist
1.3. Noggins (Section of Engineered Joist)		
i. materials	:	General commercial softwood top & bottom chord, OSB web
ii. cross section	:	62 mm wide x 220 mm deep
iii. fixing method	:	Fitted between the joists, item 1.1, and fixed with fired nails. Please see Figure 1 for positions
1.4. Noggins		
i. material	:	General commercial softwood
ii. density	:	433 kg/m^3, measured
iii. cross section	:	70 mm wide x 42 mm high
iv. fixing method	:	Fitted between the bottom chords of joist and fixed with fired nails. Please see Figure 1 for positions
1.5. Floor Boards		
i. material	:	Flooring grade tongue and groove chipboards
ii. thickness	:	22 mm
iii. density	:	648.4 kg/m^3, measured
iv. fixing method	:	Fixed in a single layer with 60 mm long x 5 mm diameter countersunk steel screws to floor joists at 300 mm centres

Item		Description
1. Timber Floor (Continued)		
1.6. Ceiling Boards		
Manufacturer	:	British Gypsum
Reference	:	Gyproc Fireline
Material	:	Type F gypsum complete with strong paper liners
Thickness	:	2 off layers 15 mm thick
Fixing method		The boards were screw fixed to the soffit of the joists. All joints of the second layer were staggered with respect to those of the first layer. All joints in the second layer were paper taped and skimmed with British Gypsum jointing compound
Fixings for first layer		
i. manufacturer	:	Senco
ii. reference	:	Duraspin 39A35MP
iii. type	:	Bugle head sharp point, coarse thread drywall screws
iv. material	:	Black phosphate finished steel
v. overall size	:	35 mm long x 3.9 mm diameter
vi. centres		150 mm centres along joints and 150 mm to the perimeter of the ceiling
Fixings for second layer		
i. manufacturer	:	Senco
ii. reference	:	Duraspin 39A50MP
iii. type	:	Bugle head sharp point, coarse thread drywall screws
iv. material	:	Black phosphate finished steel
v. overall size	:	50 mm long x 3.9 mm diameter
vi. centres		150 mm centres along joints and 150 mm to the perimeter of the ceiling
2. Specimen B (1 & 2)		
Manufacturer	:	Ansell Electrical Products Ltd
Reference	:	APRILEDP/WW
Overall dimensions and construction	:	See Figure 3 for details
Luminaire Details		
i. body materials	:	Die-cast Aluminium, Polycarbonate, Steel
ii. diffuser material	:	PMMA
iii. diffuser rating	:	650ºC
iv. chipset	:	Nationstar 3528
v. weight	:	0.28Kg
vi. input voltage	:	220-240V
vii. input frequency	:	50-60Hz
viii. inrush current	:	≤5A 2.2µS
ix. running current	:	0.032A
x. electrical class	:	II
xi. lamp type	:	LED
xii. maximum lamp size	:	35 mm x 28 mm
xiii. MacAdam steps	:	6
xiv. lumen depreciation	:	70lm – 60,000hrs
xv. LED driver manufacturer	:	D&S
xvi. IP rating	:	IP65
xvii. operating temperature	:	-5 ºC to 25 ºC
xviii. correlated colour temperature	:	3000K
xix. colour rendering index	:	Ra80
xx. forward voltage	:	27V

Item		Description
2. Specimen B (1 & 2) (Continued)		
Luminaire Details		
xxi. total power	:	6.4W
xxii. power factor	:	0.9
xxiii. cut out size	:	73 mm diameter
3. Specimen C (1 & 2)		
Manufacturer	:	Ansell Electrical Products Ltd
Reference	:	APRILEDP/CCT
Overall dimensions and construction	:	See Figure 4 for details
Luminaire Details		
i. body materials	:	Die-cast Aluminium, Polycarbonate, Steel
ii. diffuser material	:	PC
iii. diffuser rating	:	650ºC
iv. chipset	:	SUNPU 2828
v. weight	:	0.28Kg
vi. input voltage	:	220-240V
vii. input frequency	:	50-60Hz
viii. inrush current	:	≤5A 2.2µS
ix. running current	:	0.033A
x. electrical class	:	II
xi. lamp type	:	LED
xii. maximum lamp size	:	28 mm x 28 mm
xiii. MacAdam steps	:	6
xiv. lumen depreciation	:	70lm – 60,000hrs
xv. LED driver manufacturer	:	D&S
xvi. IP rating	:	IP65
xvii. operating temperature	:	-5 ºC to 25 ºC
xviii. correlated colour temperature	:	2700K - 3000K - 4000K & 6000k
xix. colour rendering index	:	Ra80
xx. forward voltage	:	27V
xxi. total power	:	7W
xxii. power factor	:	0.9
xxiii. cut out size	:	73 mm diameter
4. Specimen D		
Manufacturer	:	Ansell Electrical Products Ltd
Reference	:	AEFRG/MW
Overall dimensions and construction	:	See Figure 5 for details
Luminaire Details		
i. body materials	:	Aluminium
ii. weight	:	0.19Kg
iii. input voltage	:	230v
iv. input frequency	:	50Hz
v. electrical class	:	I
vi. lamp type	:	GU10
vii. maximum lamp size	:	50 mm x 60 mm
viii. IP rating	:	IP20
ix. operating temperature	:	5 ºC to 25 ºC
x. total power	:	50W
xi. cut out size	:	76 mm diameter

Item		Description
5. Specimen E		
Manufacturer	:	Ansell Electrical Products Ltd
Reference	:	AEFRD/MW
Overall dimensions and construction	:	See Figure 6 for details
Luminaire Details		
i. body materials	:	Aluminium
ii. weight	:	0.18Kg
iii. input voltage	:	230v
iv. input frequency	:	50Hz
v. electrical class	:	I
vi. lamp type	:	GU10
vii. maximum lamp size	:	50 mm x 60 mm
viii. IP rating	:	IP20
ix. operating temperature	:	5 ºC to 25 ºC
x. total power	:	50W
xi. cut out size	:	76 mm diameter
6. Specimen F		
Manufacturer	:	Ansell Electrical Products Ltd
Reference	:	AEFRD/IP65/MW
Overall dimensions and construction	:	See Figure 7 for details
Luminaire Details		
i. body materials	:	Aluminium
ii. weight	:	0.19Kg
iii. input voltage	:	230v
iv. input frequency	:	50Hz
v. electrical class	:	I
vi. lamp type	:	GU10
vii. maximum lamp size	:	50 mm x 60 mm
viii. IP rating	:	IP65
ix. operating temperature	:	5 ºC to 25 ºC
x. total power	:	50W
xi. cut out size	:	76 mm diameter
7. Specimen G (1 & 2)		
Manufacturer	:	Ansell Electrical Products Ltd
Reference	:	APRILEDP/G/BLK
Overall dimensions and construction	:	See Figure 8 for details
Luminaire Details		
i. body materials	:	Die-cast Aluminium, Polycarbonate, Steel
ii. diffuser material	:	PMMA
iii. diffuser rating	:	650ºC
iv. chipset	:	SUNPU 2828
v. weight	:	0.31Kg
vi. input voltage	:	220-240V
vii. input frequency	:	50-60Hz
viii. inrush current	:	≤5A 2.2µS
ix. running current	:	0.033A
x. electrical class	:	II
xi. lamp type	:	LED
xii. maximum lamp size	:	28 mm x 28 mm
xiii. MacAdam steps	:	6
xiv. lumen depreciation	:	70lm – 60,000hrs

Item		**Description**
7. Specimen G (1 & 2) (Continued)		
Luminaire Details		
xv. LED driver manufacturer	:	D&S
xvi. IP rating	:	IP65
xvii. operating temperature	:	-5 ºC to 25 ºC
xviii. correlated colour temperature	:	2700K - 3000K - 4000K & 6000k
xix. colour rendering index	:	Ra80
xx. forward voltage	:	27V
xxi. total power	:	7W
xxii. power factor	:	0.9
xxiii. cut out size	:	73 mm

Test Observations

Time		All observations are from the unexposed face unless noted otherwise.
mins	secs	
-60	00	The full test load is applied.
00	00	**The test commences.**
03	00	Paper face of the plasterboard is burning away.
10	00	No visible significant change to the unexposed face of the floor assembly.
11	00	Blue flaming is visible from the ends of the light fittings on the exposed face.
14	00	Slight amount of smoke/steam is being released from the ends of the floor assembly.
20	00	The ceiling is radiating an orange colour on the exposed face.
21	00	The inside of light fitting C has fallen away on the exposed face.
30	00	The floor assembly is maintaining its load bearing capacity, integrity and insulation.
34	00	Smoke/steam continued to be released from the ends of the floor.
40	00	The ceiling remains in place with no evidence of any falling away.
44	00	The ceiling is radiating an orange colour on the exposed face.
47	00	All of the insides of the light fittings appear to have fallen away on the exposed face.
58	00	Smoke release increases from the end of the floor assembly.
60	00	Flaming along the left hand side/corner of the floor. The test is discontinued..

Test Photographs

The unexposed face of the test assembly prior to testing

The unexposed face of the test assembly after 30 minutes of testing

The unexposed face of the test assembly after 50 minutes of testing

The unexposed face of the test assembly after 58 minutes of testing

Temperature Pressure and Deflection Data

Mean Furnace Temperature, Together With The Temperature/Time Relationship Specified In The Standard

Time Mins	Specified Furnace Temperature Deg. C	Actual Furnace Temperature Deg. C
0	20	24
2	445	459
4	544	597
6	603	653
8	646	576
10	678	666
12	706	712
14	728	723
16	748	737
18	766	754
20	781	776
22	796	806
24	809	813
26	820	806
28	832	838
30	842	850
32	852	857
34	860	866
36	869	874
38	877	881
40	885	889
42	892	896
44	899	903
46	906	908
48	912	915
50	918	921
52	924	926
54	930	932
56	935	937
58	940	944
60	945	949

Individual and mean temperatures recorded on the unexposed surface of the flooring

Time Mins	T/C Number 211 Deg. C	T/C Number 212 Deg. C	T/C Number 213 Deg. C	T/C Number 214 Deg. C	T/C Number 215 Deg. C	Mean Temp Deg. C
0	17	18	15	15	18	17
2	17	18	15	15	18	17
4	17	17	15	15	18	16
6	16	17	15	15	18	16
8	16	17	15	15	18	16
10	16	18	15	16	18	17
12	17	18	16	16	18	17
14	18	20	17	18	19	18
16	20	21	17	20	19	19
18	27	22	19	22	20	22
20	53	24	20	24	22	29
22	65	27	20	27	24	33
24	69	33	22	29	27	36
26	71	44	22	29	28	39
28	74	52	23	30	31	42
30	76	56	24	32	32	44
32	77	57	25	33	34	45
34	77	58	26	35	35	46
36	77	58	27	36	37	47
38	76	58	27	37	38	47
40	76	58	29	38	39	48
42	75	57	29	39	40	48
44	75	57	30	40	41	49
46	74	56	31	41	42	49
48	74	55	31	42	42	49
50	74	54	31	42	43	49
52	73	53	32	43	43	49
54	72	52	33	43	44	49
56	71	52	33	44	44	49
58	71	52	34	44	44	49
60	72	51	34	44	45	49

Individual temperatures recorded on the unexposed surface adjacent to joints in the flooring

Time Mins	T/C Number 216 Deg. C	T/C Number 217 Deg. C	T/C Number 218 Deg. C	T/C Number 219 Deg. C	T/C Number 220 Deg. C	T/C Number 221 Deg. C
0	18	18	19	19	19	18
2	18	18	19	19	19	18
4	18	18	19	19	19	18
6	18	18	19	18	19	18
8	18	18	18	18	19	18
10	19	19	18	18	19	18
12	20	20	18	18	19	18
14	22	21	18	18	19	18
16	26	23	20	18	20	18
18	31	27	22	18	21	18
20	42	35	25	18	23	19
22	57	49	30	19	25	19
24	66	60	40	19	28	20
26	69	67	48	20	30	21
28	69	69	53	20	33	22
30	69	70	56	21	35	22
32	68	69	58	21	36	23
34	69	69	59	22	37	24
36	67	68	59	23	38	25
38	66	67	60	24	40	26
40	64	66	59	24	41	27
42	64	65	60	25	42	29
44	63	64	59	26	42	30
46	62	63	59	27	43	31
48	63	63	60	28	44	33
50	64	63	60	29	44	34
52	62	62	59	30	45	35
54	61	62	59	31	45	36
56	62	62	60	32	46	37
58	63	62	60	33	46	38
60	63	62	69	34	46	41

Individual temperatures recorded adjacent to the specimen light fittings in the air cavity

Time Mins	T/C Number 222 Deg. C	T/C Number 223 Deg. C	T/C Number 224 Deg. C	T/C Number 225 Deg. C	T/C Number 226 Deg. C	T/C Number 227 Deg. C	T/C Number 228 Deg. C	T/C Number 229 Deg. C	T/C Number 230 Deg. C
0	18	74	19	18	18	20	18	17	18
2	29	554	31	19	55	32	38	83	29
4	31	706	35	35	148	59	37	102	41
6	40	624	36	37	119	101	39	38	61
8	53	604	47	50	118	80	73	55	77
10	78	660	57	66	118	76	83	64	97
12	77	670	65	73	105	78	110	73	118
14	290	811	82	84	145	89	149	84	148
16	524	766	102	95	163	86	144	88	157
18	555	767	154	99	198	120	138	98	167
20	615	807	149	102	196	96	138	112	156
22	664	816	176	105	249	102	119	157	136
24	655	811	220	107	253	132	119	194	113
26	380	549	127	98	208	120	145	134	137
28	423	479	117	100	192	118	124	122	164
30	360	393	117	103	204	120	139	149	165
32	371	465	116	105	203	112	181	179	173
34	403	503	116	106	255	108	192	141	167
36	419	474	118	108	257	109	176	123	171
38	428	410	118	111	204	111	137	133	163
40	320	385	118	115	223	114	140	158	172
42	257	361	117	120	209	122	130	142	183
44	281	376	117	125	219	134	133	161	151
46	295	387	118	127	227	141	145	198	162
48	335	407	122	125	197	147	139	170	144
50	403	422	124	125	202	142	141	179	141
52	452	447	129	126	223	150	134	157	173
54	560	468	132	127	255	148	134	150	168
56	618	397	132	130	287	145	135	152	152
58	627	418	137	135	361	135	134	147	174
60	538	499	146	139	320	141	142	150	192

Central vertical deflection

Time Mins	Central Vertical Deflection mm	Rate Of Deflection mm/min
0	0.000	0.000
2	1.695	1.208
4	2.031	0.168
6	2.518	0.168
8	3.407	0.554
10	3.676	0.101
12	4.230	0.285
14	4.280	0.050
16	5.103	0.436
18	5.774	0.554
20	6.697	0.319
22	7.973	0.554
24	9.349	0.436
26	11.817	1.762
28	12.857	0.604
30	13.848	0.386
32	14.838	0.386
34	15.828	0.554
36	16.600	0.336
38	17.423	0.386
40	19.017	1.595
42	19.521	0.235
44	20.075	0.269
46	20.847	0.269
48	21.384	0.269
50	22.274	0.604
52	23.533	0.386
54	25.127	0.655
56	26.940	0.990
58	57.354	7.218
60	88.154	4.465

Recorded furnace pressure

Time Mins	Recorded Pressure Pascals
0	0.00
2	16.80
4	0.00
6	13.40
8	12.60
10	23.00
12	11.30
14	20.40
16	7.10
18	13.80
20	27.80
22	0.00
24	50.00
26	20.50
28	16.70
30	15.50
32	18.40
34	18.90
36	19.00
38	18.40
40	20.40
42	17.50
44	19.30
46	18.80
48	18.80
50	19.30
52	20.20
54	20.90
56	19.10
58	15.90
60	17.30

Graph Showing Mean Furnace Temperature, Together With The Temperature/Time Relationship Specified In The Standard

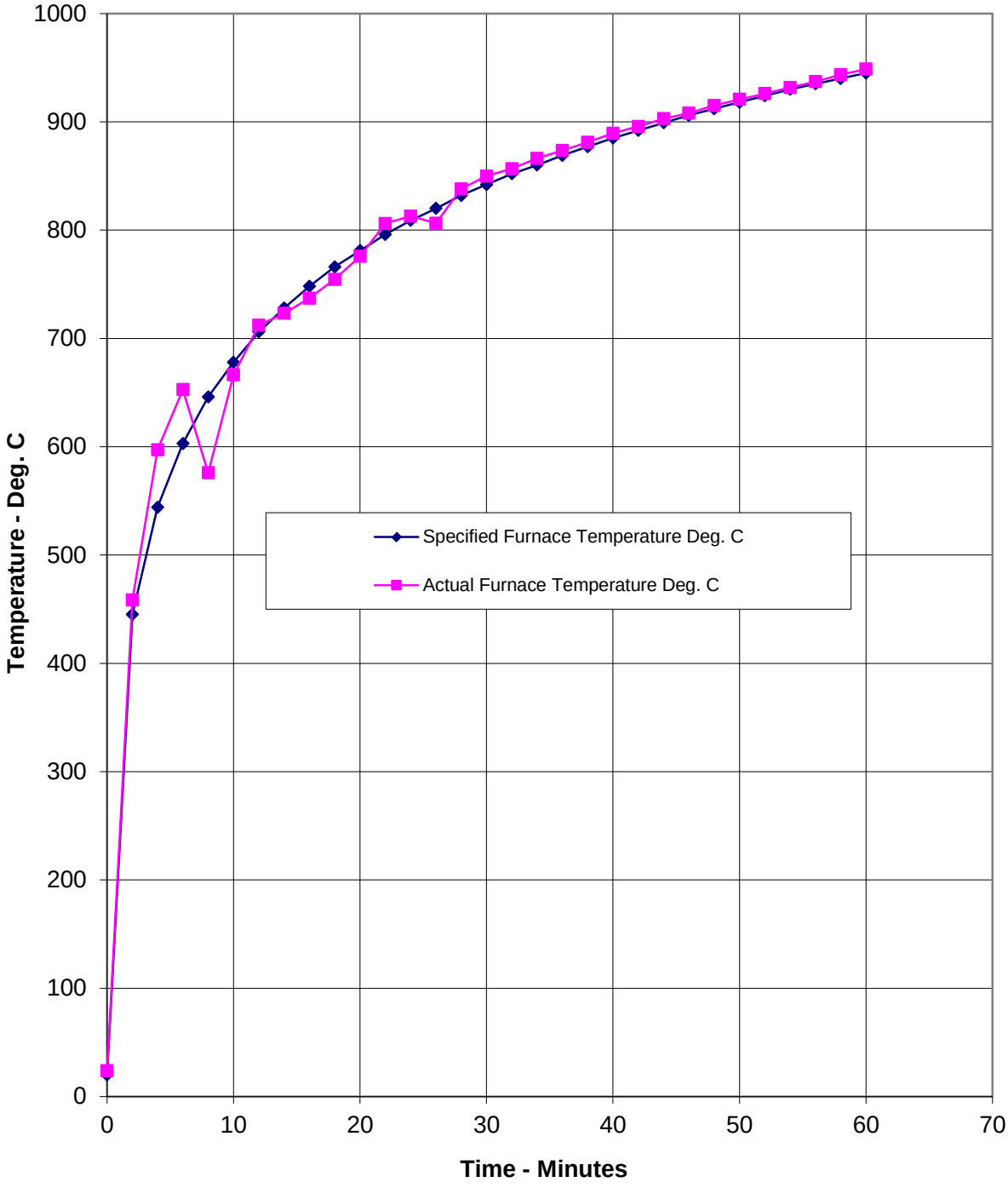

Graph Showing Mean Temperature Recorded On The Unexposed Surface Of The Specimen

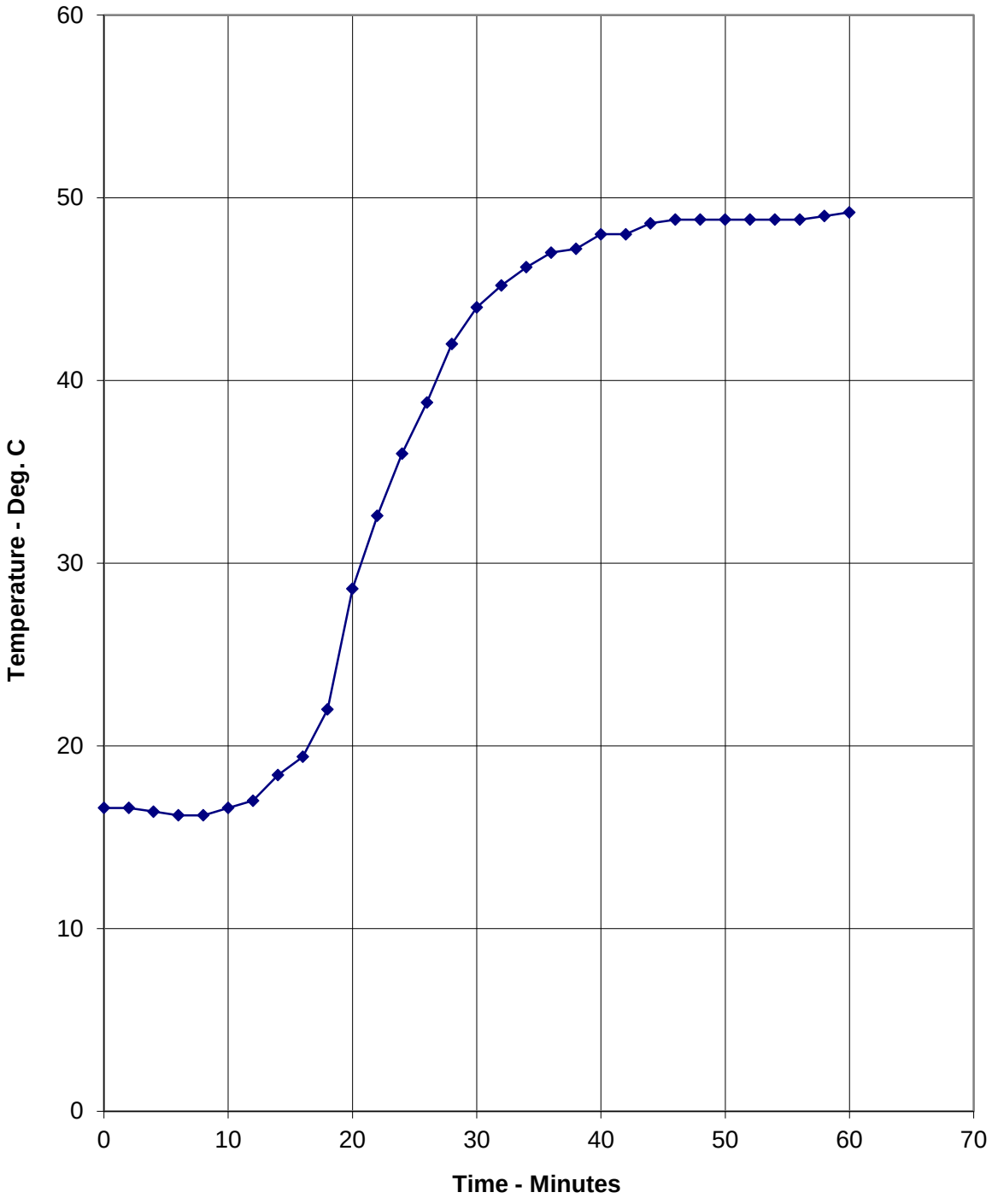

Ongoing Implications

Limitations

This report details the method of construction, the test conditions and the results obtained when the specific element of construction described herein was tested following the procedures outlined in BS EN 1363-1: 2012, and where appropriate BS EN 1363-2: 1999. Any significant deviation with respect to size, constructional details, loads, stresses, edge or end conditions other than those allowed under the field of direct application in the relevant test method is not covered by this report. Annex A of BS EN 1363-1: 2012, provides guidance information on the application of fire resistance tests and the interpretation of test data.

Because of the nature of fire resistance testing and the consequent difficulty in quantifying the uncertainty of measurement of fire resistance, it is not possible to provide a stated degree of accuracy of the result.

Conclusions

Evaluation against objective

A specimen of a loadbearing timber floor assembly protected by a direct fix ceiling assembly incorporating nine Ansell light fittings, has been subjected to a fire resistance test in accordance with the procedures given in BS EN 1365-2:2014. The specimen satisfied the performance requirements for the periods shown below:

Loadbearing capacity		60 minutes
Integrity performance	Sustained flaming	60 minutes
	Gap Gauge	60 minutes
	Cotton pad	60 minutes
Insulation performance		60 minutes

The test was discontinued after a period of 60 minutes.

Field of Direct Application

The results are directly applicable to a similar untested floor construction provided the following is true:

a) With respect to the structural building member:

The maximum moments and shear forces, which when calculated on the same basis as the test load, shall not be greater than those tested.

b) With respect to the ceiling system:

The size of panels of the ceiling lining may be increased by a maximum of 5 % but limited to a maximum of 50 mm. The length of the grid members can be increased accordingly.

The total area occupied by fixtures and fittings relative to the area of the ceiling lining is not increased and the maximum tested opening in the lining is not exceeded.

c) With respect to the cavity:

The height of the cavity '**h**' and the minimum distance '**d**' between the ceiling and the structural members (see Figure below) are equal to or greater than those tested.

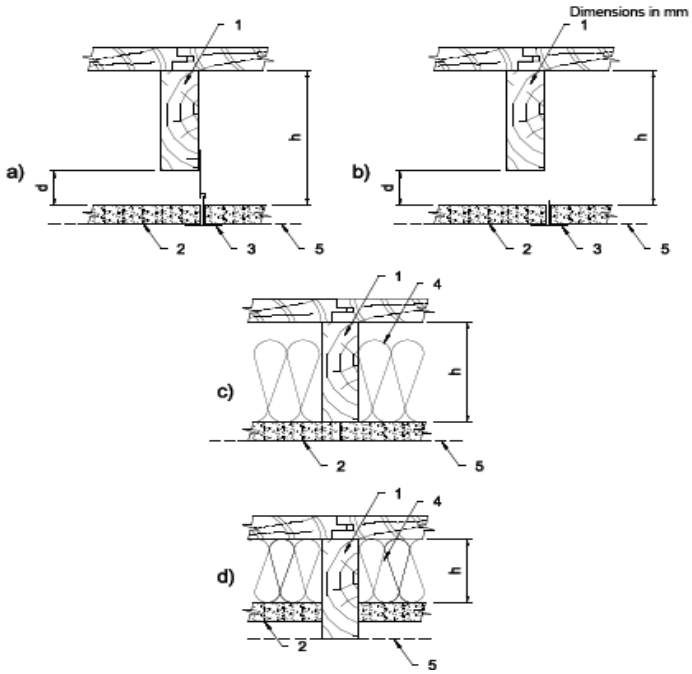

KEY

a) suspended ceiling
b) self-supported ceiling
c) and d) direct fixed ceiling with insulation in cavity
1 supporting construction (joist)
2 ceiling lining
3 supporting frame
4 insulation
5 pressure reference line
d distance between ceiling and structural members
h height of cavity