DATASHEET **HellermannTyton** SpotClip I & II

Product Description	Spacer to allow the installation of Thermal insulation over a down light spot light
Product name	SpotClip I & II

Features and benefits

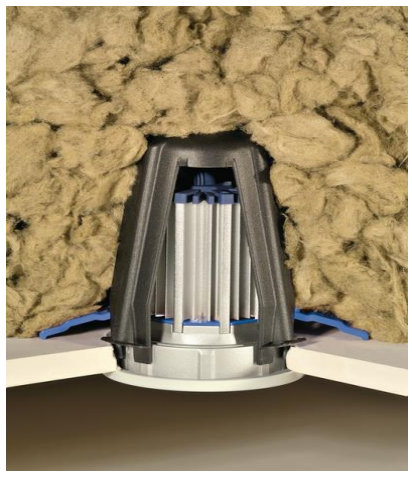

: Allows Thermal insulation to cover down lighter
: Gives improved airflow around down lighter avoiding fire risk and premature lamp failure(particularly with LED Lamps
: Can be used in both panelling and plasterboard.
: Can be installed from below or above ceiling
: Ensures a safe distance between the down light and insulation
: Reduction of overheating and heat accumulation on insulation material.
: High stability by 4-leg-design.
: Additional retaining spikes prevent shifting and displacement during mounting.
: Mounting clips lock SpotClip locks easily in place in the ceiling cavity
: The cable retainers on the SpotClip hold the supply cable in place and prevent it from coming into direct contact with the hot lamp. They also make it easier to mount and replace the lamp.
: The arrangement of the flexible mounting feet enables the clips for the downlighters to be snapped easily into place to allow for terminal boxes and fixing springs

Material	: Polyamide 6.6, fiber-glass reinforced		(PA66GF 15%)
	: RoHS		
	: Halogen Free		
Colour	: Black		
Operating temperature	: -20°C to +120°C		
Standards			
Flammability	: Conforms to UL94 V1		
	: EN60659-2-12	Glow Wire Test 960°C	

Dimensions	Hole Diameter	Height (H)	Height (H2)
Spot Clip I	62- 90mm	90mm	82mm
SpotClip II	62- 90mm	115mm	117mm

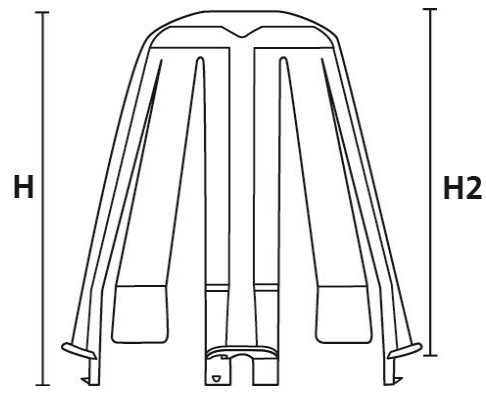

Product	Product Code	Pack Quantity
Spot Clip I	14800076	10
SpotClip II	14800096	10

Country of Origin	France

HellermannTyton Limited

www.hellermanntyton.co.uk

This information is based on our experience and does not imply suitability without prior testing. Due to the variables of manufacture and environmental conditions it is strongly recommended that samples are tested in-situ

Author Steve Slater Version 1 Revision 0 August 2014